800-1000MHz/200Watt/Module

Model Number: OC-PA08-1K200W

The model OC-PA08-1K200W is a high power amplifier operating between 800 MHz and 1000 MHz and offering a wide dynamic Range with 200 Watts typical saturated power. The employment of advanced high power devices in manufacturing ensures this module exceptional power performance, long term reliability and high efficiency. It is ideal for broadband high power RF, UHF linear applications.

FEATURES:

- Small Size and light weight;
- Instantaneous ultra broadband;
- 50 Ohms input and Output matched;
- Built-in control and protection circuits.

ELECTRICAL SPECIFICATIONS @ +28.0VDC, 25°C, 50Ω

Parameter	Symbol	Min	Typ	Max	Units
Operating Frequency	BW	800		1000	MHz
RF Output Power	P_{out}		200		Watt
Power Gain	Gp		53		dB
Power Gain Flatness	Δ Gp		±2		dB
Input Return Loss	S_{11}			-10	dB
Harmonics @100W	H		-15		dBc
Spurious Signals	Spur		-60		dBc
Switch On/Off@10-90% Time	TON/OFF		2	5	μS
In/Output Impedance	Impedance		50		Ω
Operating Voltage	VDC	26	28	30	Volt
DC Current @200W	IDD		25		Amp
Efficiency @200W	η		30		%

MECHANICAL SPECIFICATIONS

Parameter	Value	Units	Notes
Dimensions	200x150x30 [7.9x5.9x1.2]	mm [inch]	Maximum
Weight	2[4.4]	kg [lbs]	Maximum
RF Connectors Input	SMA, Female		
RF Connectors Output	N, Female		
DC Interface Connector	Hybrid,D-Sub 7-Pin,Male		
Cooling	External Heatsink Required (Not Supplied)		

ENVIRONMENTAL CHARACTERISTICS (Design to Meet)

Parameter	Minimum	Typical	Maximum	Units	Notes
Operating Temperature	-20		60	°C	
Non-operating Temperature	-25		65	°C	Storage
Relative Humidity（non-condensing）			95	%	

ABSOLUTE MAXIMUM RATING

Input RF drive level without damage	+10 dBm (Max)
Load VSWR @ POUT =100W	∞ @ all load phase & amplitude for duration of 1 minutes; 3:1 @ all load phase & amplitude continuous
Over Temperature	85°C @ heatsink [restored @ 60°C]

800-1000MHz/200Watt/Module

Model Number: OC-PA08-1K200W

DC INTERFACE CONNECTOR

Pin #	Description	Specifications
A1	VDD	28V_{DC}
A2	GND	Ground
1	ENABLE	Amplifier ENABLE: TTL Logic High (3.3V) (Internally Pulled-UP)
2	CURRENT SENSE	Analog voltage relative to I_{DD} @ 100mV per Ampere
3	TEMP SENSE	Analog voltage relative to Module's Temperature @ 10 mV/°C
4	NC	No electrical connection
5	GND	Ground

Functional Diagram

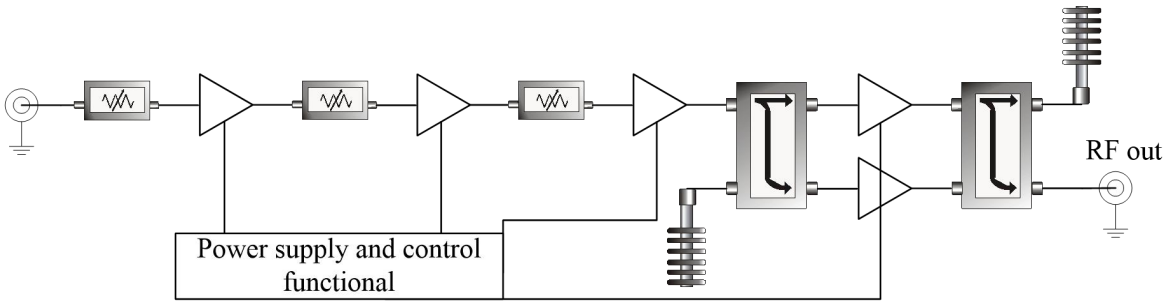

OUTLINE DRAWING (All dimensions in mm [inch])

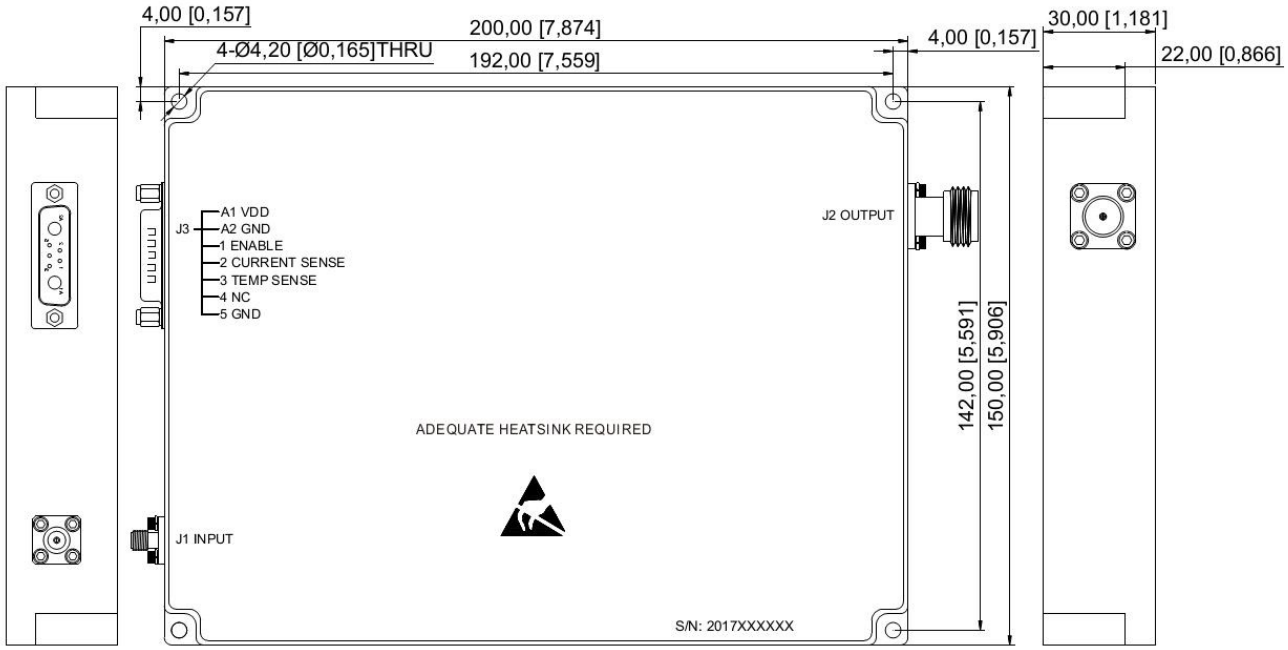

800-1000MHz/200Watt/Module

Model Number: OC-PA08-1K200W

TYPICAL PERFORMANCE PLOTS

Graph1: Output Power(Low temp.-20±3℃)

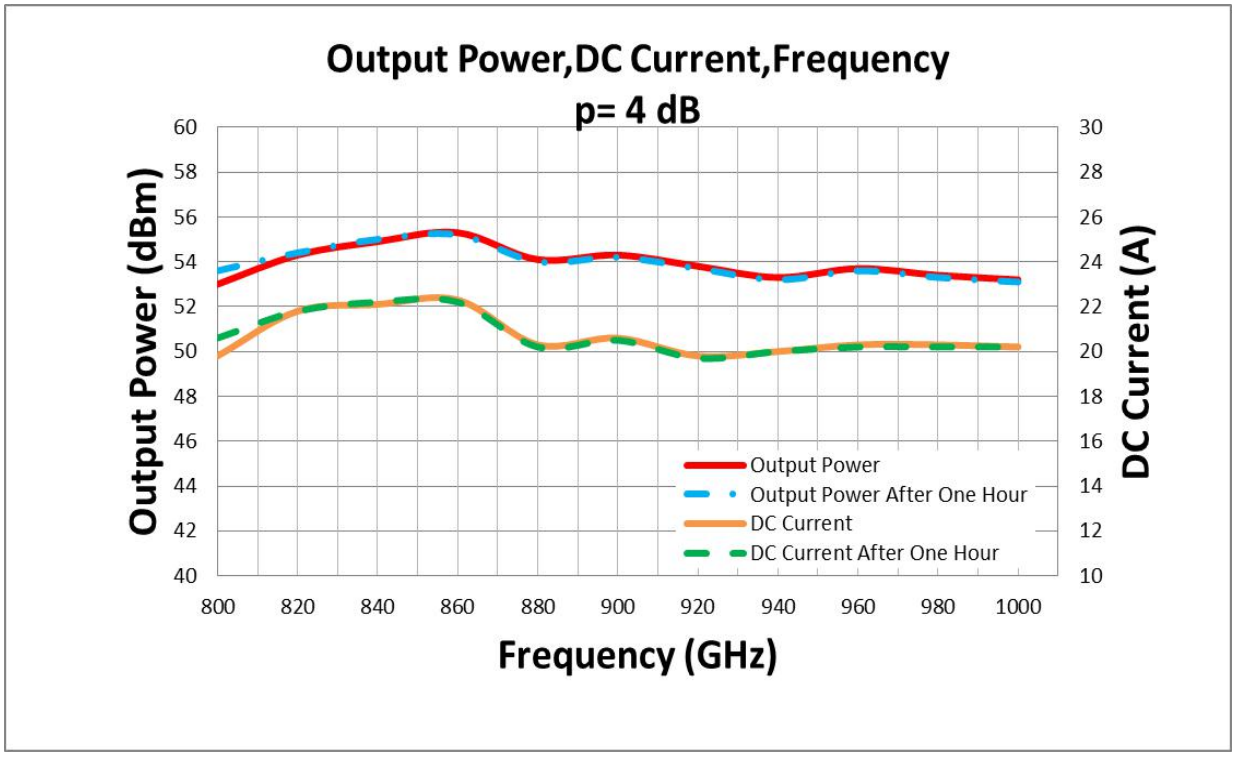

Graph2: Output Power (High temp.+60±3℃)

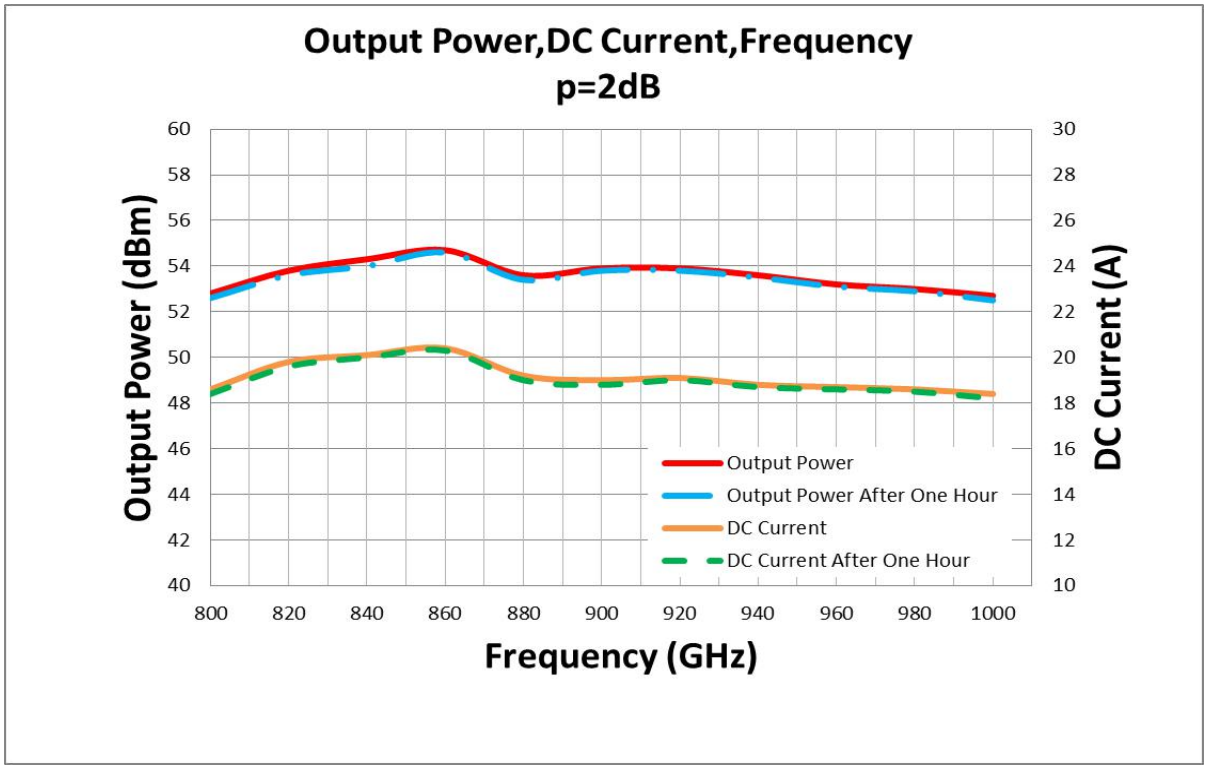

800-1000MHz/200Watt/Module

Model Number: OC-PA08-1K200W

Graph3: Output Power (Normal temp.+25±3℃)

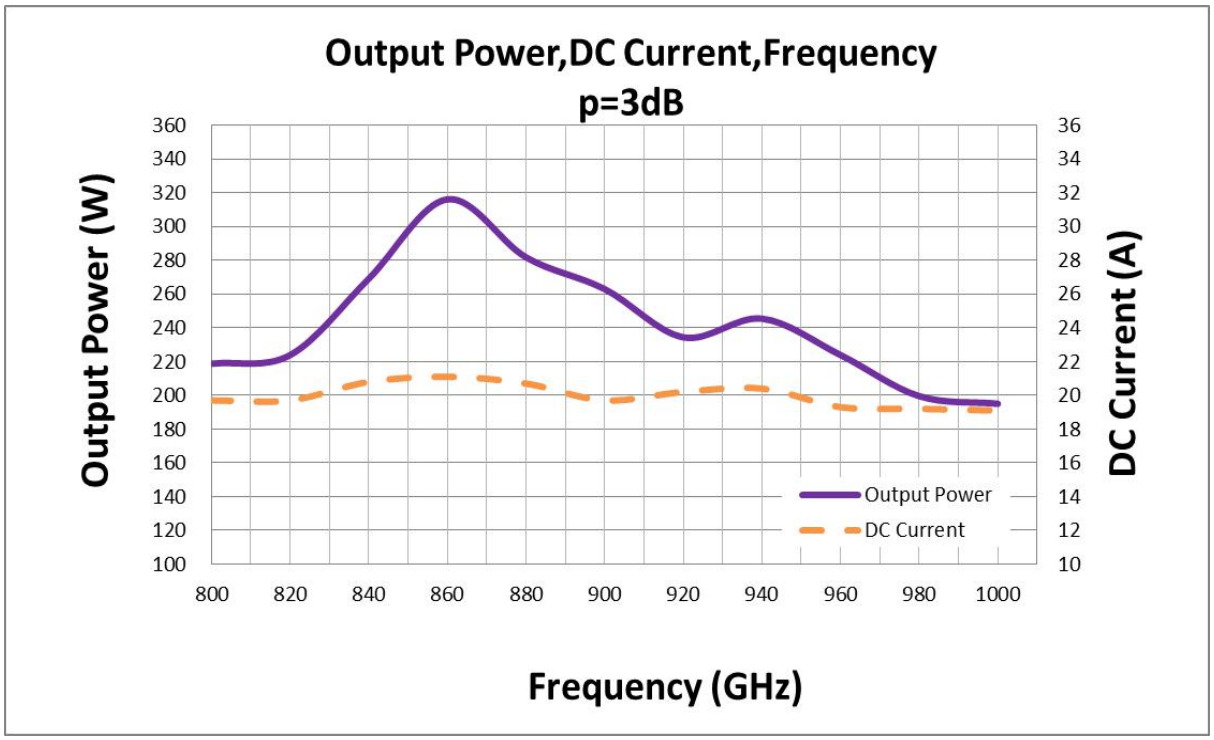

Note: Adequate heatsink required.